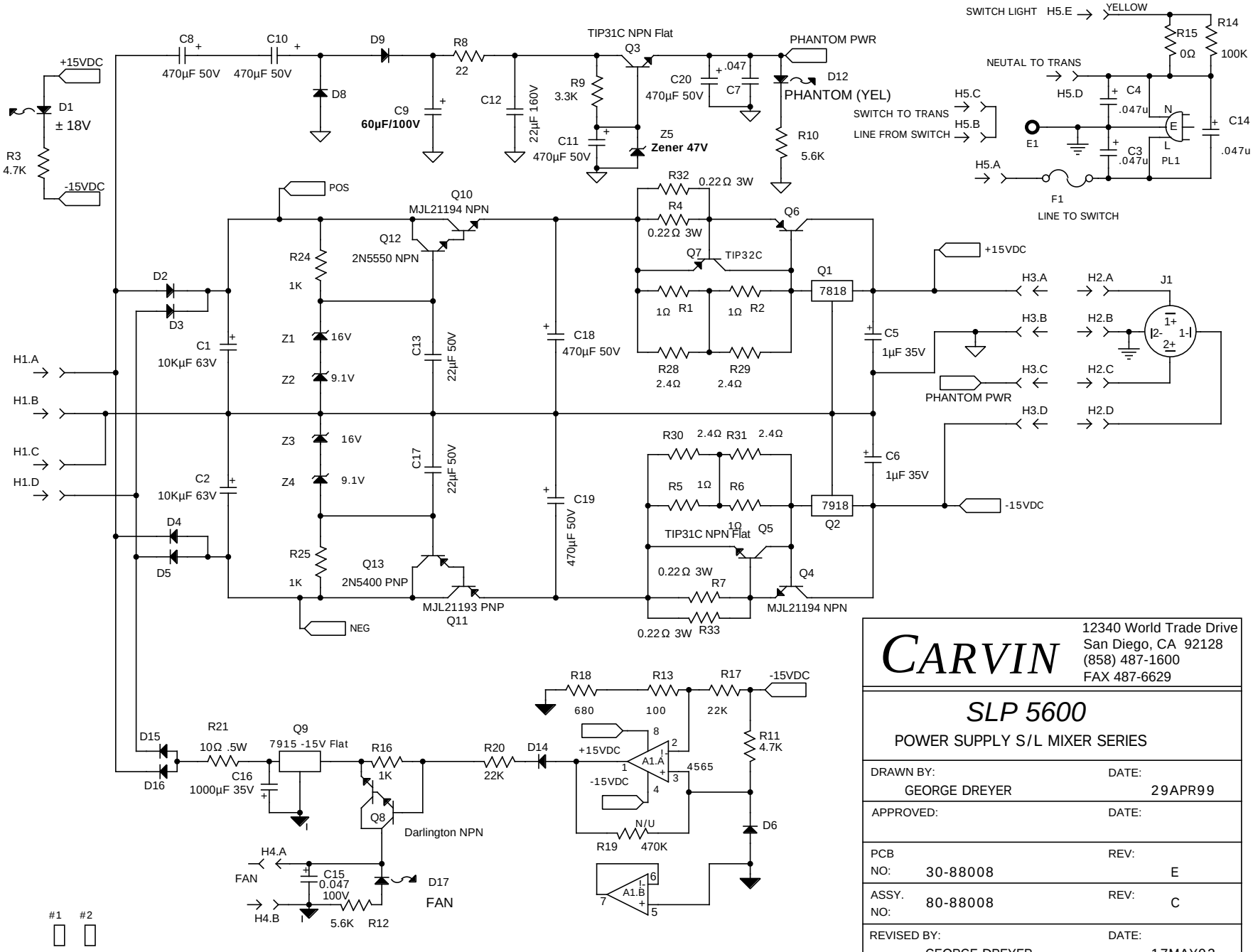

CARVIN
12340 World Trade Drive
San Diego, CA 92128
(858) 487-1600
FAX 487-6629

SLP 5600

POWER SUPPLY S/L MIXER SERIES

DRAWN BY: GEORGE DREYER	DATE: 29APR99
APPROVED:	DATE:
PCB NO: 30-88008	REV: E
ASSY. NO: 80-88008	REV: C
REVISED BY: GEORGE DREYER	DATE: 17MAY02