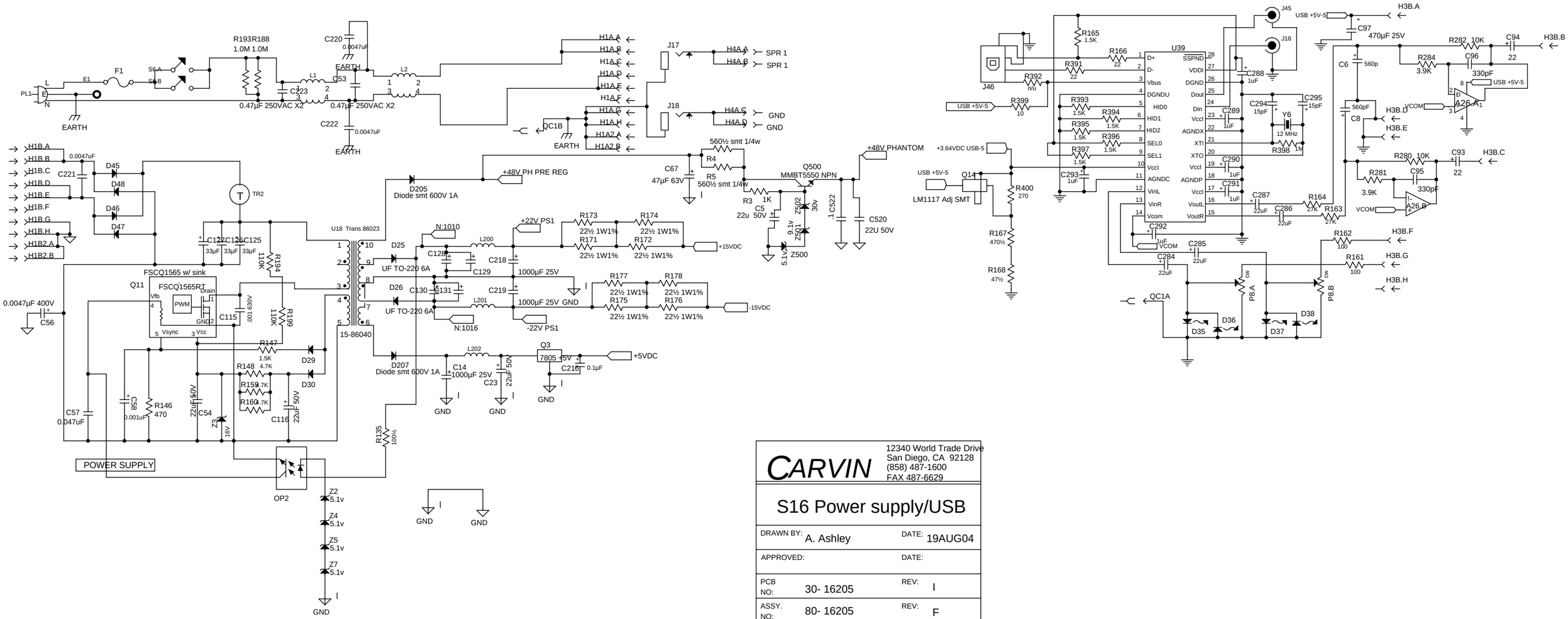

CARVIN	12340 World Trade Drive San Diego, CA 92128 (858) 487-1600 FAX 487-6629		
S16 Power supply/USB			
DRAWN BY:	A. Ashley	DATE:	19AUG04
APPROVED:		DATE:	
PCB NO:	30- 16205	REV:	I
ASSY. NO:	80- 16205	REV:	F
REVISED BY:	A. Ashley	DATE:	20AUG07